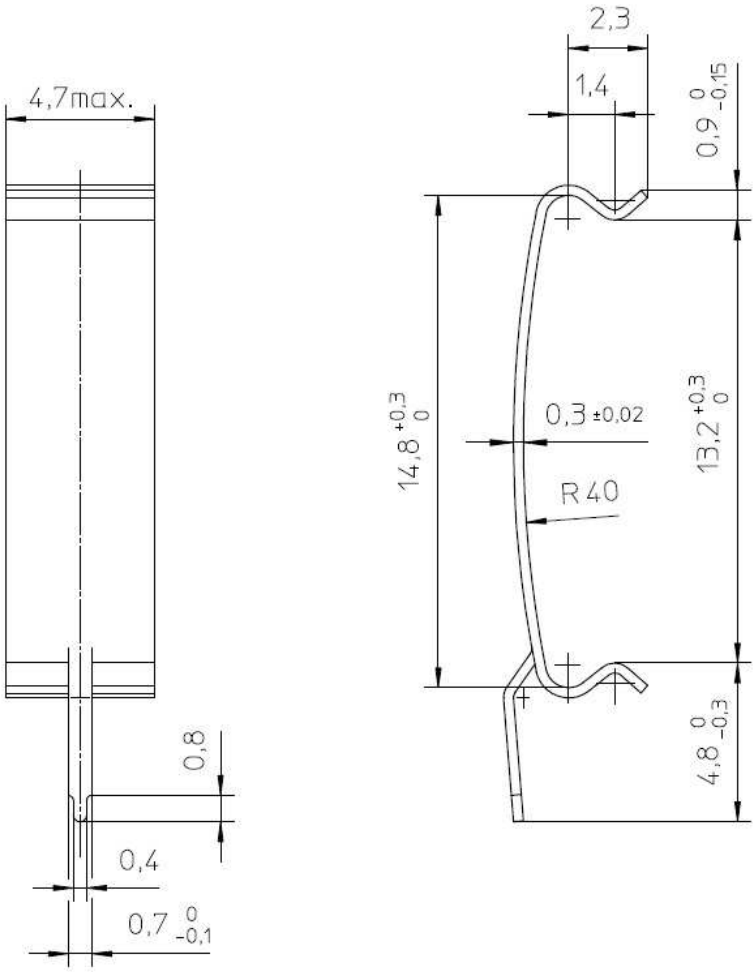

Clamping force by 14,3 mm : 15N
Clip material : carbon spring stell SK7
Solderability : IEC 60 068-2-20 Part 2, Test Ta, method 1

CLASS.NO.	CLI/P-RM8/I	4322 021 34311	93-09-29
96-11-29			96-03-27
			96-11-29
			04-10-20
			19-08-12

NAME NAAM	M.Marszalek	SUPERS. VERV.	1 SH BL. SH BL. 112 – 001	010		A4
MPA	CHECK CONTR.	DAT. 91-02-22	Property of Eigendom van	© FERROXCUBE 2000		