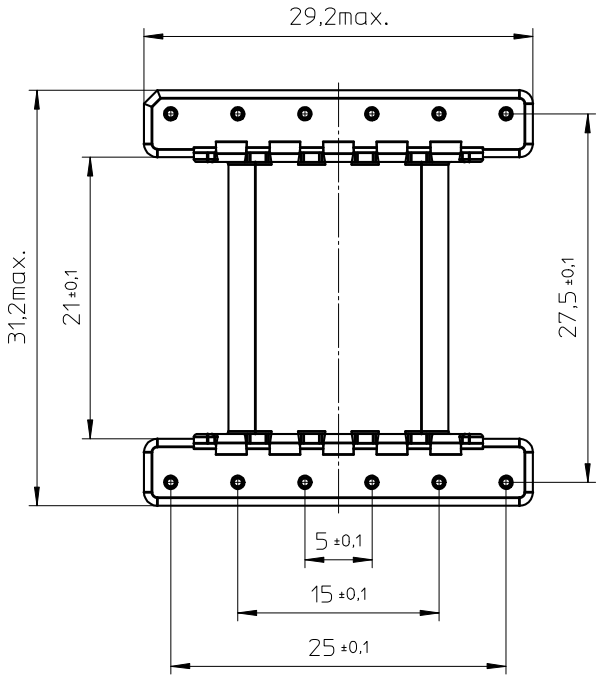

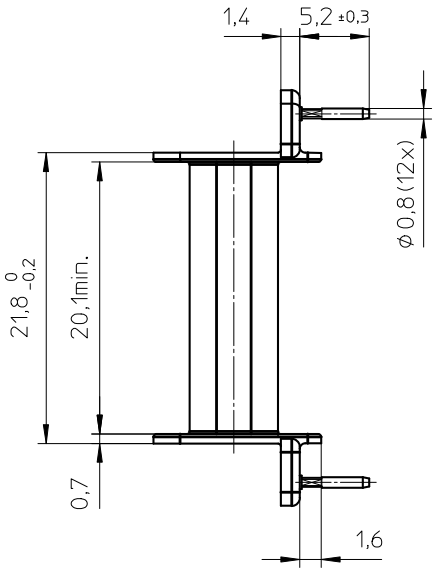

HOLE PATTERN:

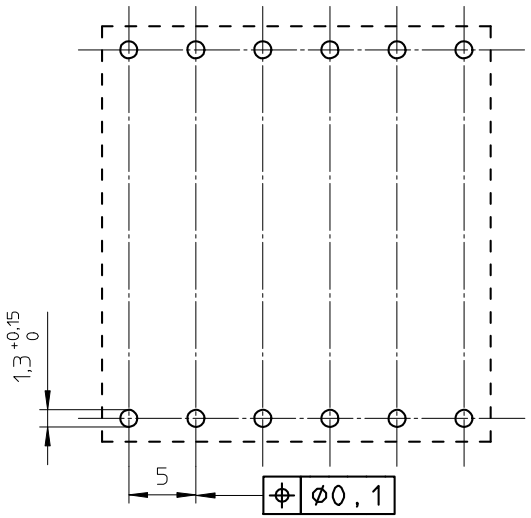

PHASED OUT

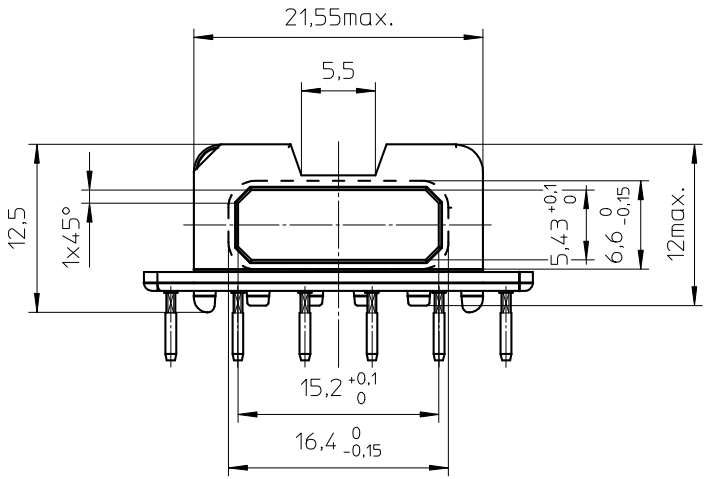

Coil former material:	Sumikon PM-9630 (PF), glass-reinforced. UL file number: E41429- UL94V-0.
Pin material:	CuSn - Ni flash, Sn plated.
Max. operating temp.:	acc. to IEC 60 085 class H, 180°C.
Resistance to soldering heat:	acc. to IEC 60 068-2-20 Part 2, Test Tb, method 1B, 350°C-3,5s
Solderability:	acc. to IEC 60 068-2-20 Part 2, Test Ta, method 1, 235°C-2s
Min. winding area:	52,3 mm².
Mean length of turn:	52,9 mm.

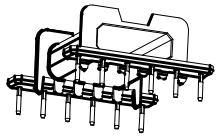

CLASS.NO.	CSH-EFD30-1S-12P-IZ	4322 021 06951	07-11-09 / 11-07-12	
07-11-09				
NAME NAAM M.Tryngiel	SUPERS. VERV.	001 SH BL. SH BL. 112 – 001	069	A3
MPA	CHECK CONTR.	DAT. 07-11-09	Property of Eigendom van	© FERROXCUBE 2000