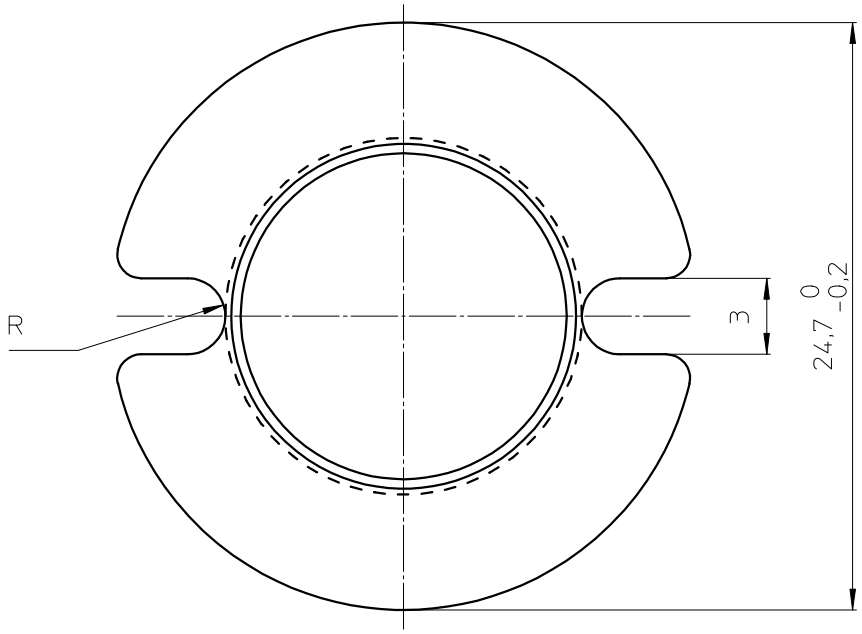


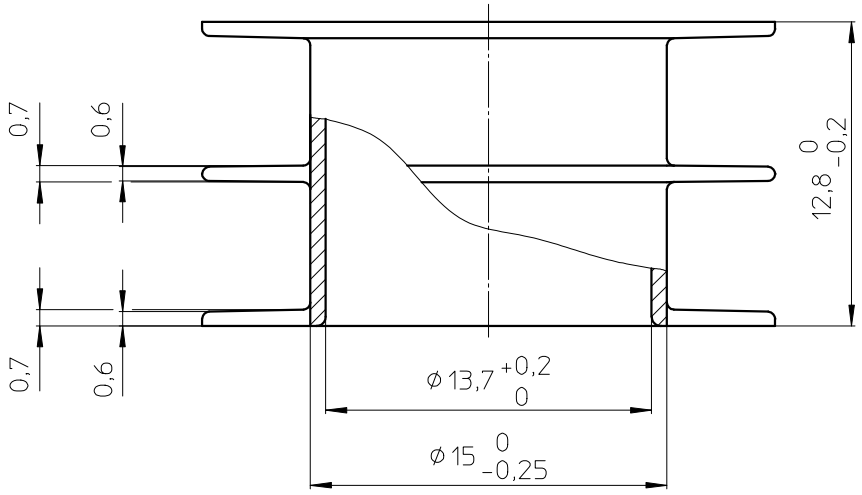


| | |
|---|---|
| Coil former material: | Valox 420SEO (PBT), glass-reinforced. UL file number: E45329 - UL94V-0. |
| Max. operating temp.: | acc. to IEC 60 085 class F, 155°C. |
| Min. winding area: | 49,8 mm $^2$. |
| Mean length of turn: | 62 mm. |

| | | | | | | | | |
|---|---|---|---|---|---|---|---|---|
| CLASS.NO. | CP-P30/19-2S | | | 4322 021 02481 | | | | ~~97-08-22~~ 00-06-29 |
| 00-06-29 | | | | | | | | |
| NAME NAAM M.Veekens | SUPERS. VERV. 4322 021 30372 | 1 | SH BL. | SH BL. 112 – 001 | 010 | | A4 | |
| MPA | CHECK CONTR. | DAT. 97-08-22 | Property of Eigendom van | © FERROXCUBE 2000 | | | | |