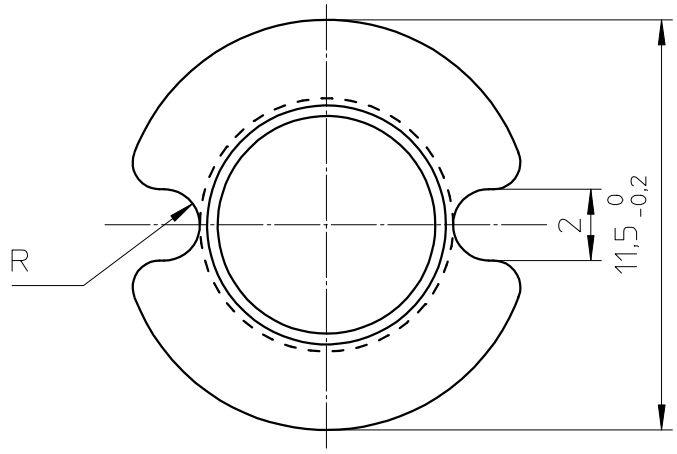

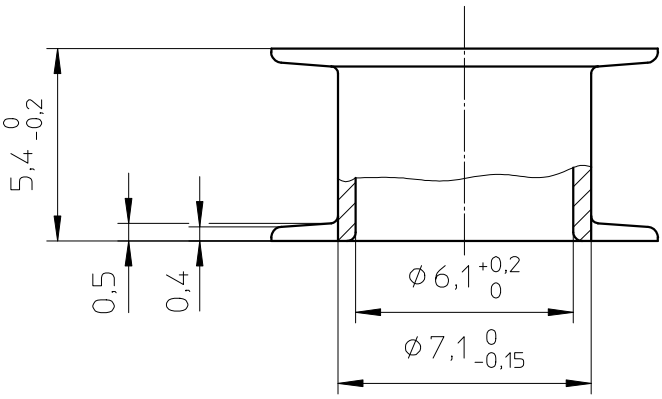

Coil former material:	Valox 420SEO (PBT), glass-reinforced.
	UL file number: E45329(R) - UL94V-0.
Max. operating temp.:	acc. to IEC 85 class F, 155°C.
Min. winding area:	8,8 mm^2.
Mean length of turn:	28,9 mm.

CLASS.NO.	CP-P14/8-1S	4322 021 02361	~~97-08-22~~ 00-06-15
00-06-15			

NAME NAAM	M.Veekens	SUPERS. VERV.	1 SH BL. SH BL. 112 – 001	010		A4
MPA	CHECK CONTR.	DAT. 97-08-22	Property of Eigendom van	© FERROXCUBE 2000		